Installation & Wiring Instructions
Halo Surface Round - Standalone Emergency LED for Surface Mounting

Liteplan 25 years of reliability

PLEASE READ THESE INSTRUCTIONS BEFORE COMMENCING INSTALLATION & LEAVE WITH END USER

Description:

The Halo Surface Round is a circular, standalone 3-hour non-maintained emergency luminaire suitable for surface mounting. The LED is driven at 700mA from a 3.2V 3.8Ah lithium iron phosphate (LiFePO4) battery that provides a high output LED in emergency conditions.
The DALI variants of the Halo Surface operate the DALI-2 protocol.
The product is supplied with one of a choice of LED emitters which offer varying arcs of illuimance. Please refer to our website for to download the ldt files.
This unit will recharge the batteries after the test clause of 22.3 of BS EN 61347-2-7:2012
The product features battery temperature protection in accordance with IEC 61347-2-7: 2012+A12:2022.

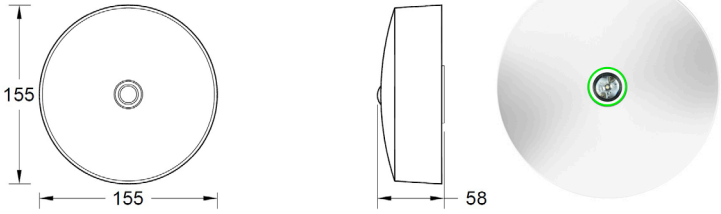

Specification:

Input Voltage	230-240 Volts AC 50/60 Hz
Basic Power (charging)	1.6W 17mA λ = 0.40
Basic Power (charged)	0.2W 11mA λ = 0.07
DALI Power (charging)	1.7W 14mA λ = 0.50
DALI Power (charged)	0.3W 8mA λ = 0.15
Duration	3-hours
Battery Tc Parameters	0°C to 55°C
Mains Input Terminal	0.5mm - 2.5mm (0.75mm Stranded)
Recharge Period	24-hours
Battery Discharge Current	900mA Nominal
Discharge Voltage Limit (DDP)	2.4V
Ingress Protection	IP20
Battery Pack	3.2V 3.8Ah (LiFePO4)
Battery Type	IFpR27/67
Charge Current	225mA Nominal
Diameter	155mm
Depth	58mm
Cable Entry	20mm Centre Rear
Overall Weight (standard)	0.37Kg
Overall Weight (DALI)	0.39Kg
Beam Angle (open area)	135°
Beam Angle (corridor)	115° x 155°
LED CCT	5700K

The battery within this luminaire is servicable and should be replced with the Liteplan part number 1/LP38/S/TE. This change should be carried out by a qualified professional.

Ordering codes:

Standard Operation:

CRW/1/NM/**	RAL 9016
CRB/1/NM/**	RAL 9005

DALI 2 Self-test:

CRW/1/DA/**	RAL 9016
CRB/1/DA/**	RAL 9005

** - OA for Open Area (268lm) or CO for Corridor (266lm)

Important

It is recommended that this product is installed by a competent person ensuring the installation complies with the necessary standards. Liteplan accept no responsibility for injury, damage or loss, which may arise as a result of incorrect installation, operation or maintenance.

The product requires an un-switched supply for charging the battery.

ISOLATE MAINS SUPPLIES AND DISCONNECT THE BATTERY BEFORE INSTALLATION OR MAINTENANCE.

Installation:

1. Twist the cover off and mount the luminaire to either the ceiling or wall, using fixing points or Besa box fixing. For wall mounting ensure the battery is at the bottom of the luminaire.
2. Connect the mains supply as per wiring diagram shown on Pg. 2
3. If DALI terminal is present, connect DALI bus to the DA DA terminals.
4. Connect the battery.
5. Refit the cover into the retaining clips, ensuring no cables are trapped.
6. When mounting the corridor version please ensure that the lens is aligned along the corridor correctly. The longer part of the lens should follow the orientation of the corridor.

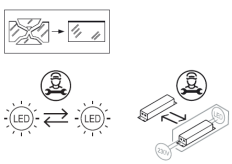

The light source and control gear in this luminaire shall only be replaced by the original manufacturer, service agent or a similarly qualified person.

Tel +44 (0)1708 372223 | www.liteplan.com | customerservice@liteplan.com | RM3 0AP. UK

Liteplan reserve the right to change colour, price or specification without prior notice

ISS 021126

LiFePO4 DALI 2 CE UK CA

Installation & Wiring Instructions
Halo Surface Round - Standalone
Emergency LED for Surface Mounting

Liteplan
25 years of reliability

PLEASE READ THESE INSTRUCTIONS BEFORE COMMENCING INSTALLATION & LEAVE WITH END USER

1

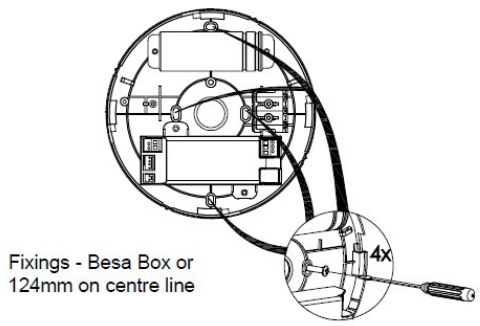

2

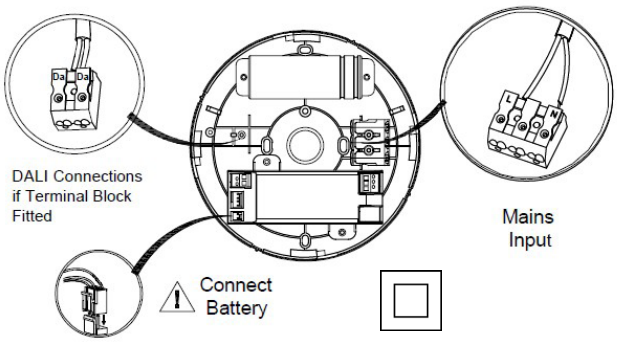

3

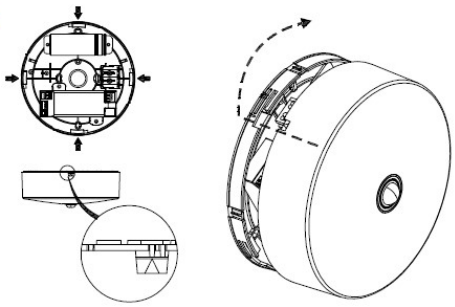

4 **Ensure correct orientation of lens**

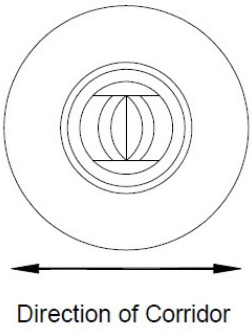

To download a test record, please visit this QR code link:

Testing/Commisioning:

- Ensure the power is connected.
- Connect the battery.
- Switch on the Un-switched Supply - Check the Charge LED illuminates.
- Switch off the Un-switched Supply - Check the Charge LED extinguishes and the load LED illuminates.
- Enter the commissioning date on the Battery Pack.
- Switch on the Un-switched Supply

Tel +44 (0)1708 372223 | www.liteplan.com | customerservice@liteplan.com | RM3 0AP. UK

Liteplan reserve the right to change colour, price or specification without prior notice

ISS 021126